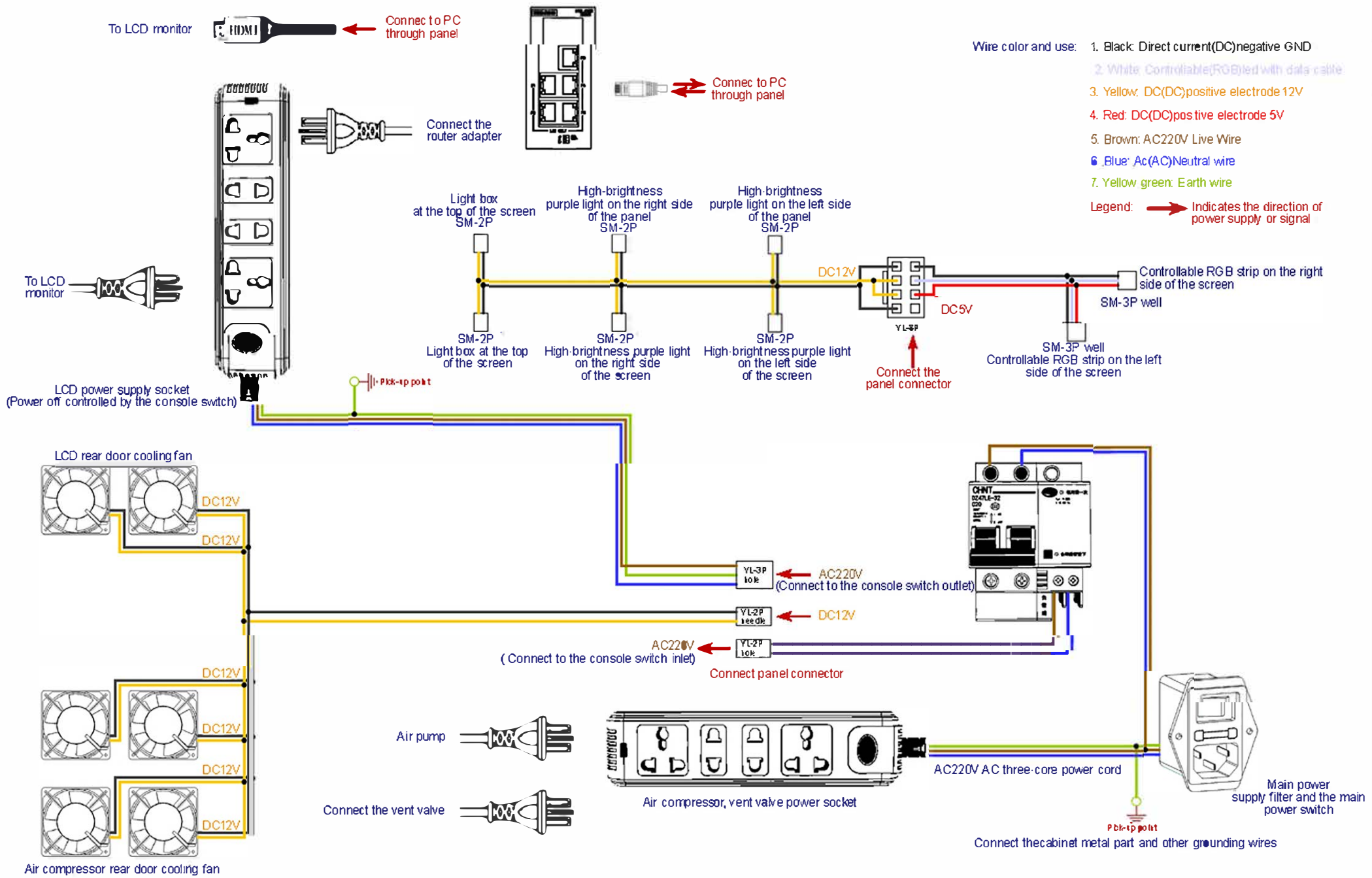
To LCD monitor
HDMI
Connec to PC through panel
Connec to PC through panel
Connect the router adapter
Wire color and use:
1. Black: Direct current(DC)negative GND
2. White: Controllable(RGB)led with data cable
3. Yellow: DC(DC)positive electrode 12V
4. Red: DC(DC)positive electrode 5V
5. Brown: AC220V Live Wire
6. Blue: Ac(AC)Neutral wire
7. Yellow green: Earth wire
Legend:
Indicates the direction of power supply or signal
To LCD monitor
Light box at the top of the screen SM-2P
High-brightness purple light on the right side of the panel SM-2P
High-brightness purple light on the left side of the panel SM-2P
DC12V
DC5V
YL-3P
Controllable RGB strip on the right side of the screen
SM-3P well
SM-2P Light box at the top of the screen
SM-2P High-brightness purple light on the right side of the screen
SM-2P High-brightness purple light on the left side of the screen
Connect the panel connector
SM-3P well Controllable RGB strip on the left side of the screen
Pick-up point
LCD power supply socket (Power off controlled by the console switch)
LCD rear door cooling fan
DC12V
DC12V
YL-3P lok
AC220V
(Connect to the console switch outlet)
YL-2P needle
DC12V
AC220V
(Connect to the console switch inlet)
YL-2P lok
Connect panel connector
DC12V
DC12V
DC12V
DC12V
Air pump
Connect the vent valve
Air compressor, vent valve power socket
AC220V AC three-core power cord
Main power supply filter and the main power switch
Pick-up point
Connect thecabinet metal part and other grounding wires
Air compressor rear door cooling fan

Wire color and use;

1. Black: Direct current(DC)negative GND
2. White: Controllable(RGB)led with data cable
3. Yellow: DC(DC)positive electrode 12V
4. Red: DC(DC)positive electrode 5V
5. Brown: AC220V Live Wire
6. Blue: Ac(AC)Neutral wire
7. Yellow-green: Earth wire

Legend: → Indicates the direction of power supply or signal

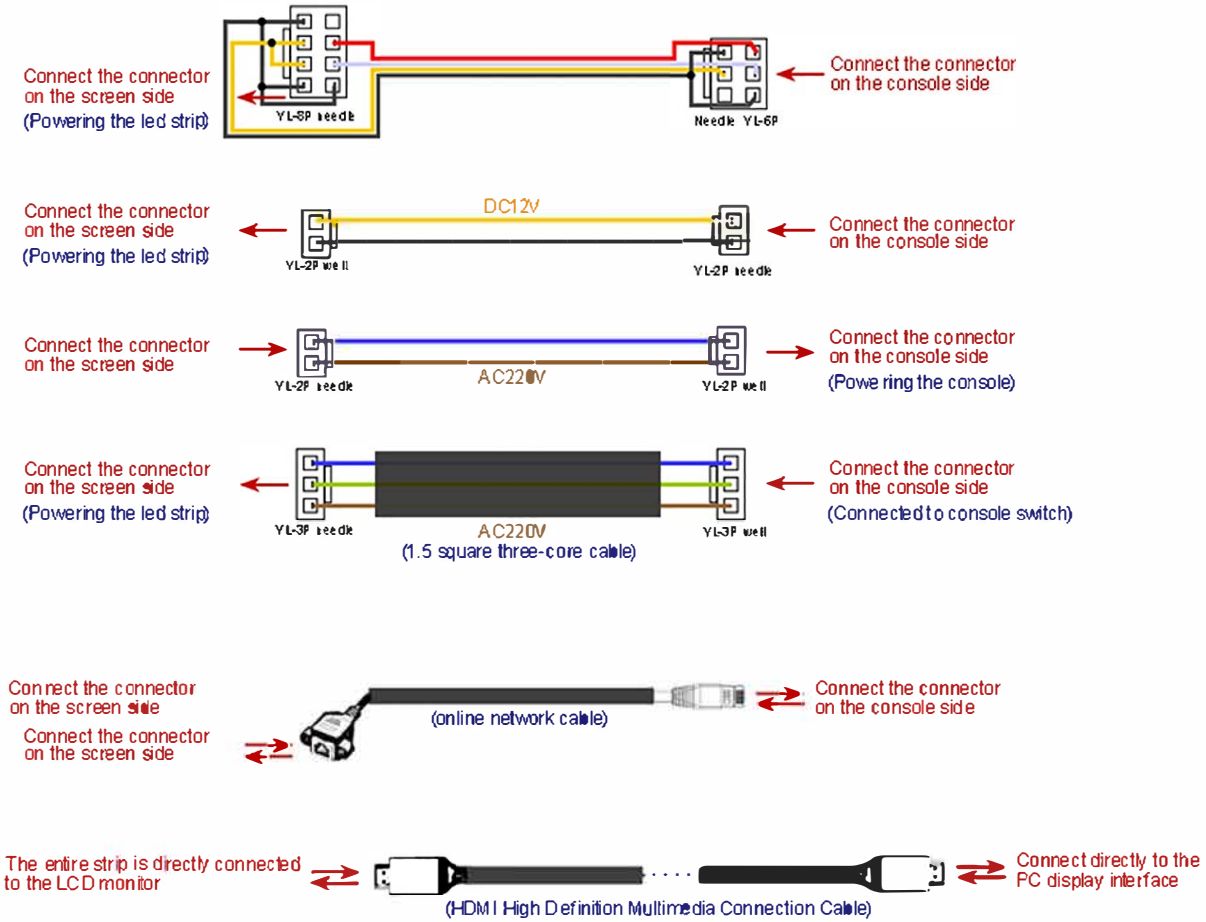

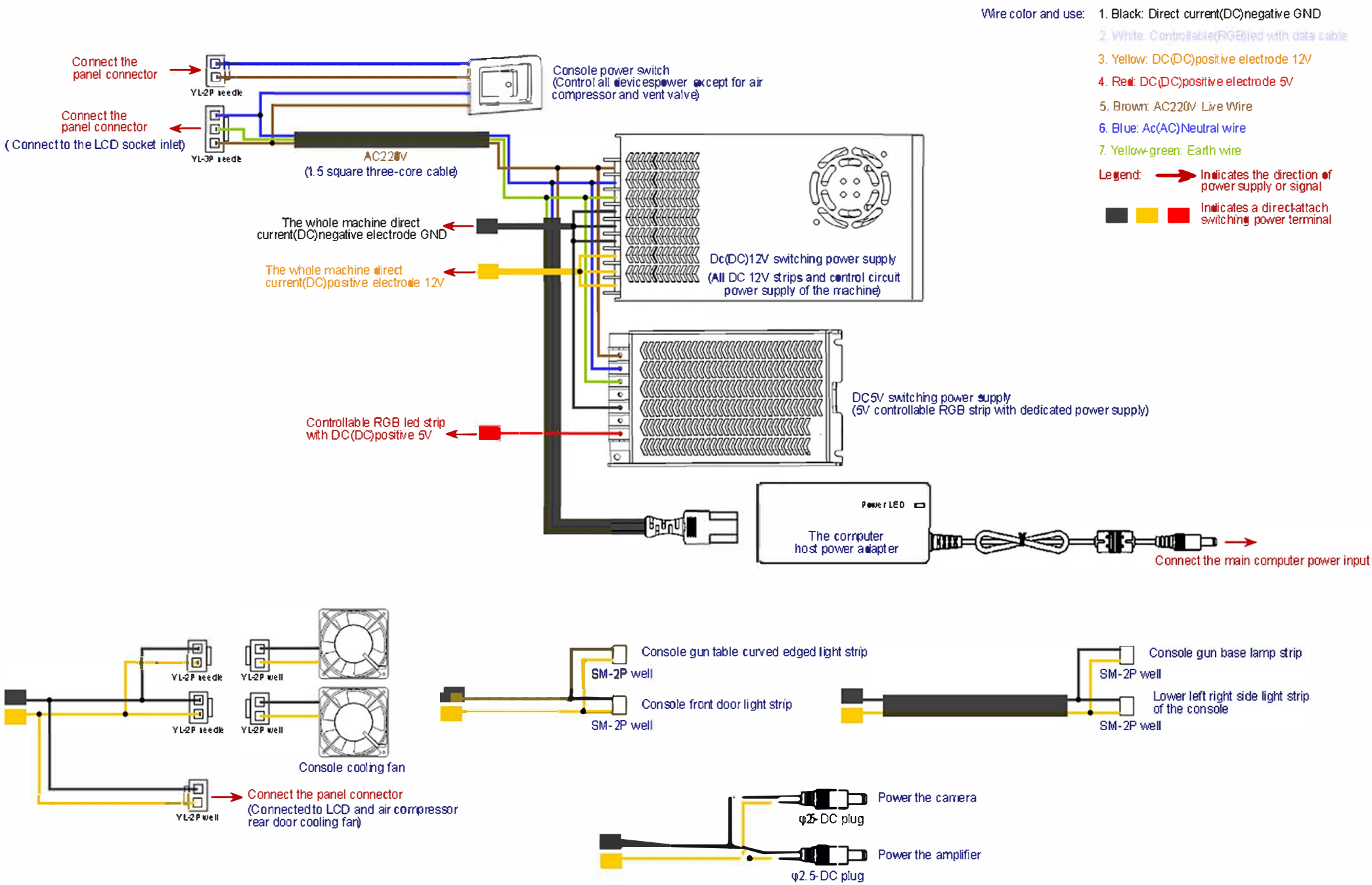
Wire color and use:
1. Black: Direct current(DC)negative GND
2. White: Controllable(RGB)led with data cable
3. Yellow: DC(DC)positive electrode 12V
4. Red: DC(DC)positive electrode 5V
5. Brown: AC220V Live Wire
6. Blue: Ac(AC)Neutral wire
7. Yellow-green: Earth wire
Legend:
Indicates the direction of power supply or signal
Indicates a direct-attach switching power terminal
Connect the panel connector
YL-2P needle
Connect the panel connector
(Connect to the LCD socket inlet)
YL-3P needle
Console power switch
(Control all devicespower except for air compressor and vent valve)
AC220V
(1.5 square three-core cable)
The whole machine direct current(DC)negative electrode GND
The whole machine direct current(DC)positive electrode 12V
Dc(DC)12V switching power supply
(All DC 12V strips and control circuit power supply of the machine)
DC5V switching power supply
(5V controllable RGB strip with dedicated power supply)
Controllable RGB led strip with DC(DC)positive 5V
Power LED
The computer host power adapter
Connect the main computer power input
YL-2P needle
YL-2P well
YL-2P needle
YL-2P well
Console cooling fan
YL-2P well
Connect the panel connector
(Connected to LCD and air compressor rear door cooling fan)
Console gun table curved edged light strip
SM-2P well
Console front door light strip
SM-2P well
Console gun base lamp strip
SM-2P well
Lower left right side light strip of the console
SM-2P well
Power the camera
φ2.5-DC plug
Power the amplifier
φ2.5-DC plug

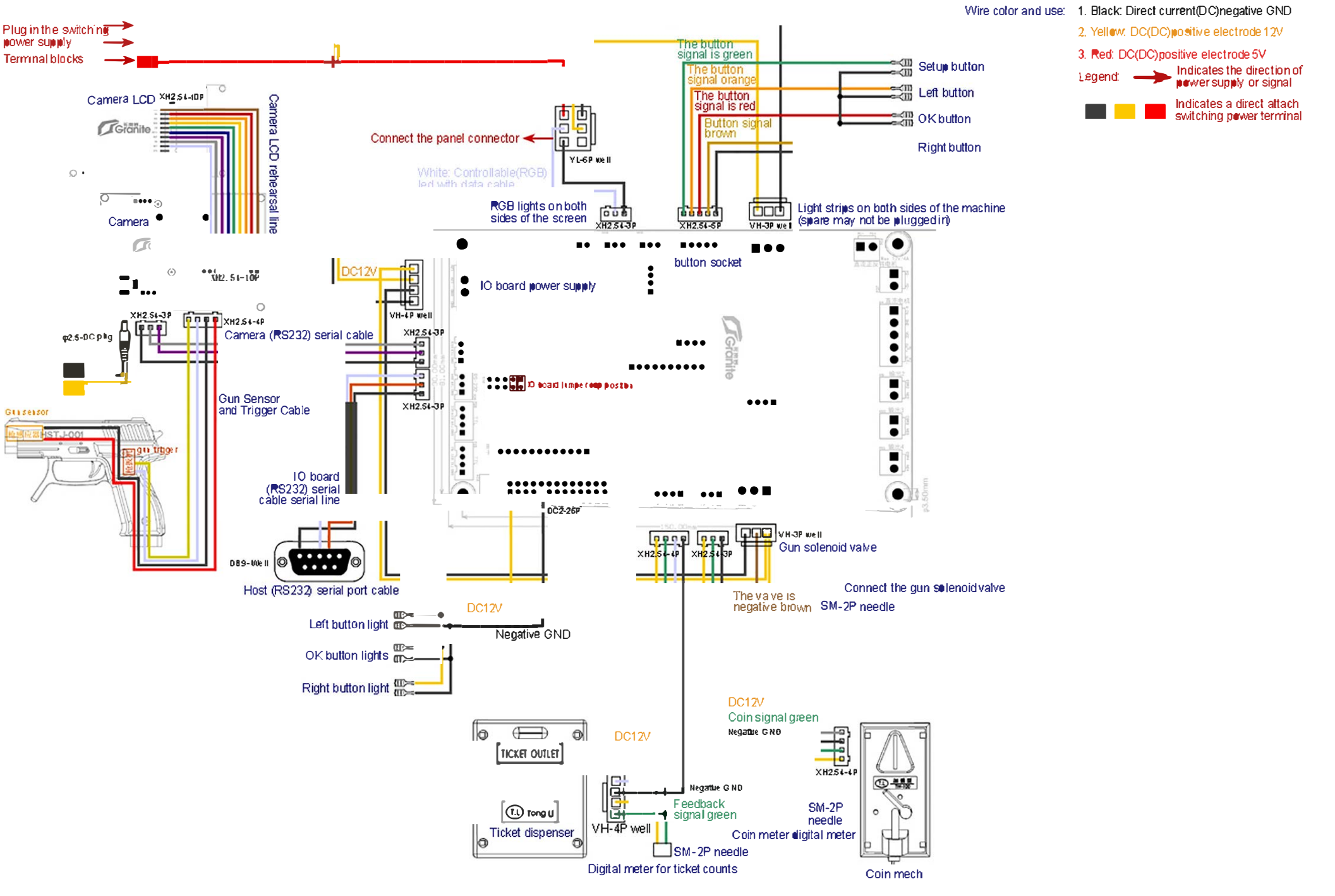
Wire color and use:
1. Black: Direct current(DC)negative GND
2. Yellow: DC(DC)positive electrode 12V
3. Red: DC(DC)positive electrode 5V
Legend:
Indicates the direction of power supply or signal
Indicates a direct attach switching power terminal
Plug in the switching power supply
Terminal blocks
Camera LCD
XH2.54-10P
Camera LCD rehearsal line
Camera
Connect the panel connector
YL-6P well
White: Controllable(RGB) led with data cable
RGB lights on both sides of the screen
XH2.54-3P
The button signal is green
The button signal orange
The button signal is red
Button signal brown
XH2.54-5P
VH-3P well
Setup button
Left button
OK button
Right button
Light strips on both sides of the machine (spare may not be plugged in)
button socket
DC12V
VH-4P well
IO board power supply
XH2.54-3P
XH2.54-4P
φ2.5-DC plug
Camera (RS232) serial cable
IO board jumper cap position
Gun Sensor and Trigger Cable
Gun sensor
HST-001
gun trigger
IO board (RS232) serial cable serial line
DC2-26P
DB9-Well
Host (RS232) serial port cable
Gun solenoid valve
The valve is negative brown
Connect the gun solenoid valve
SM-2P needle
DC12V
Left button light
Negative GND
OK button lights
Right button light
TICKET OUTLET
DC12V
Coin signal green
Negative GND
Negative GND
Feedback signal green
Ticket dispenser
VH-4P well
SM-2P needle
Digital meter for ticket counts
SM-2P needle
Coin meter digital meter
Coin mech

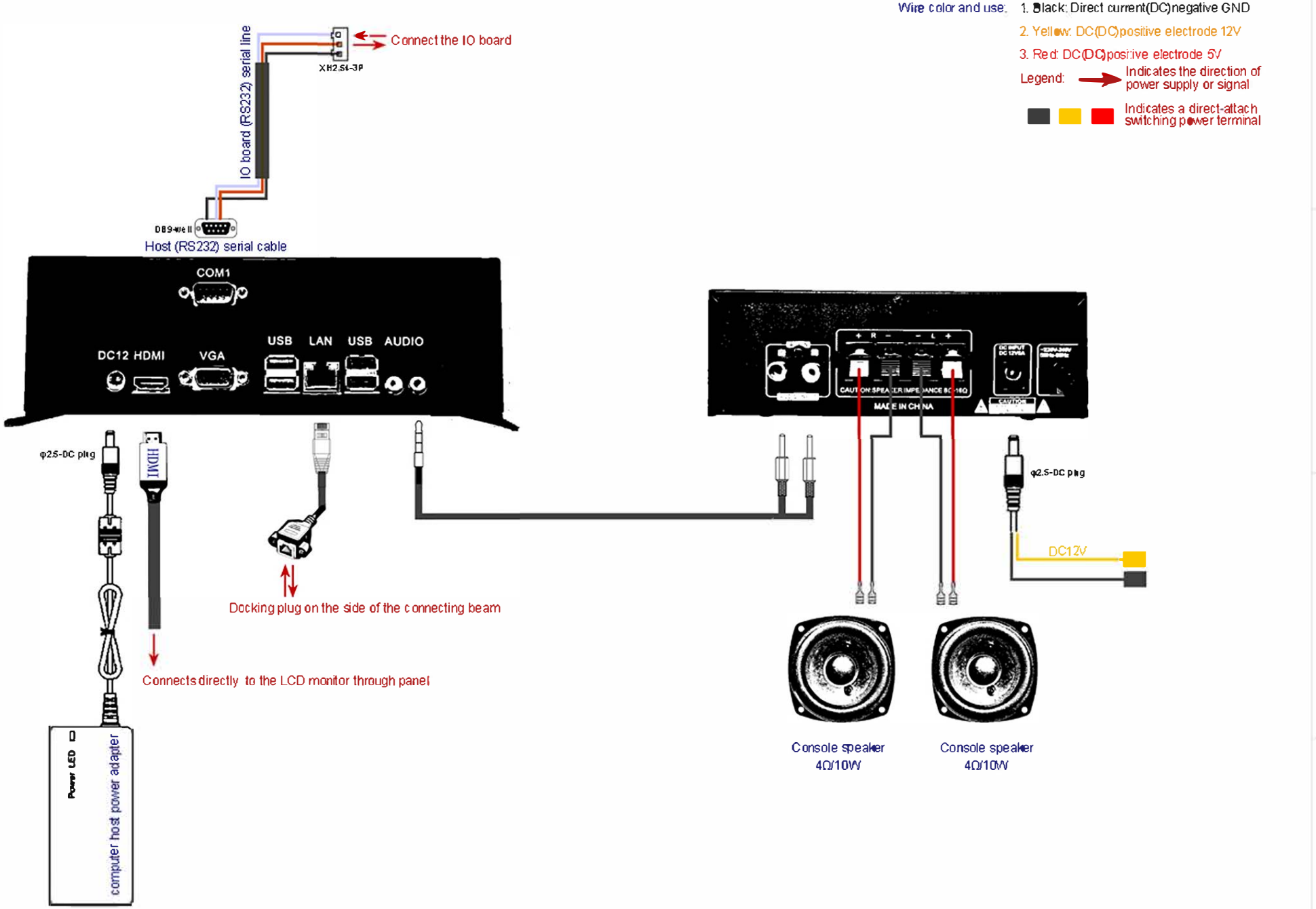
Wire color and use:
1. Black: Direct current(DC)negative GND
2. Yellow: DC(DC)positive electrode 12V
3. Red: DC(DC)positive electrode 5V
Legend:
Indicates the direction of power supply or signal
Indicates a direct-attach switching power terminal
Connect the IO board
XH2.54-3P
IO board (RS232) serial line
DB9-male
Host (RS232) serial cable
COM1
DC12 HDMI
VGA
USB
LAN
USB
AUDIO
MADE IN CHINA
φ2.5-DC plug
HDMI
Docking plug on the side of the connecting beam
Connects directly to the LCD monitor through panel
Power LED
computer host power adapter
φ2.5-DC plug
DC12V
Console speaker
4Ω/10W
Console speaker
4Ω/10W